used for: D-SUB

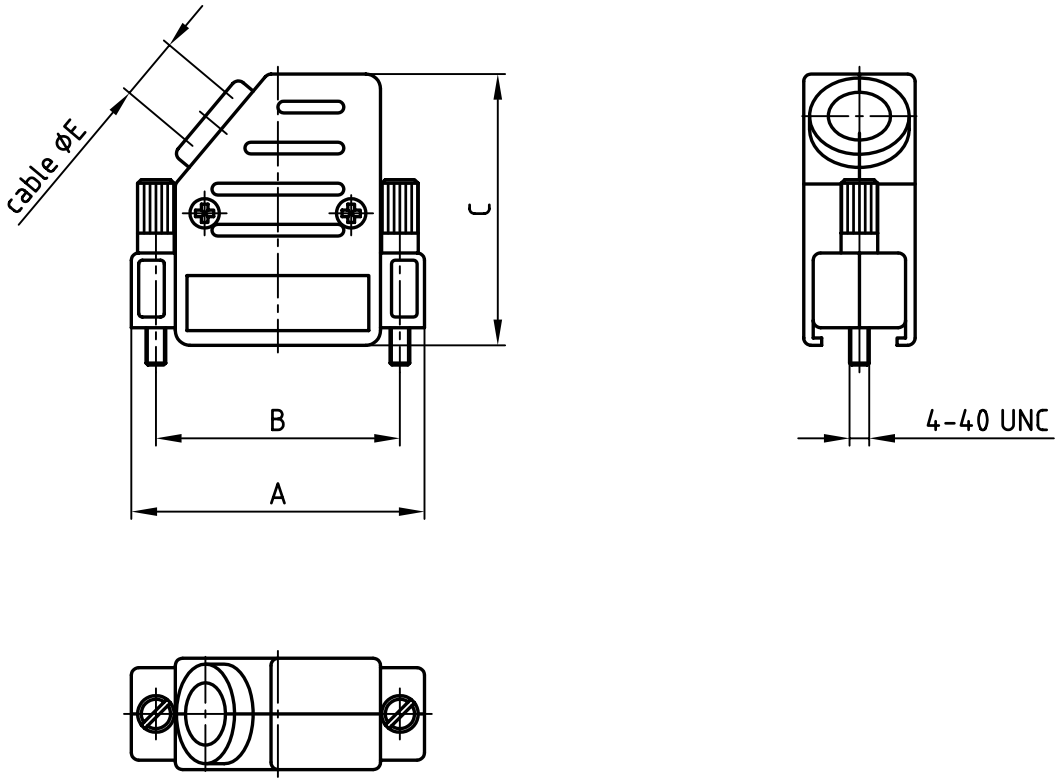

Directive 2002/95/EC „RoHS" Compliant

APPROVAL # FREIGABE # DEBLOCAGE # AUTOR/ZACION # APPROVAL

CUSTOMER APPROVAL DATE:

NAME: TITLE:

COMPANY NAME:

APPROVAL # FREIGABE # DEBLOCAGE # AUTOR/ZACION # APPROVAL

No. of pos.	A	B	C	D	ØE	Part No:
9	31.5	25.0	37.0	15.2	8.5	**600X57009X**
15	40.0	33.3	37.0	15.2	8.5	**600X57015X**
25	53.5	47.0	41.0	15.2	11.0	**600X57025X**
37	70.0	63.5	41.0	15.2	11.0	**600X57037X**
50	67.8	61.1	41.0	18.2	12.0	**600X57050X**

THIS DRAWING MAY NOT BE COPIED OR REPRODUCED IN ANY WAY, AND MAY NOT BE PASSED ON TO A THIRD PARTY WITHOUT WRITTEN PERMISSION. OWNERSHIP AND COPYRIGHT OF CONEC GmbH

DO NOT ALTER CAD DRAWING BY HAND

rev.	description	date	name

tolerance

dim. in mm

2002	date	name
drawn	28.02.	Schmidt
appd.	28.02.	E. Mickenbecker
norm	DIN41652	
d-old	KAT116QA	

CONEC®

scale: 1:1

material: ABS UL 94 V-0 Metallized

title:

Plastic hood

side cable exit, with jack screws

9 - 50 pos.

dwg no: 16K1A673

AutoCAD 2000

DIN-A 4

sh: 1/1

part no: SEE TABLE