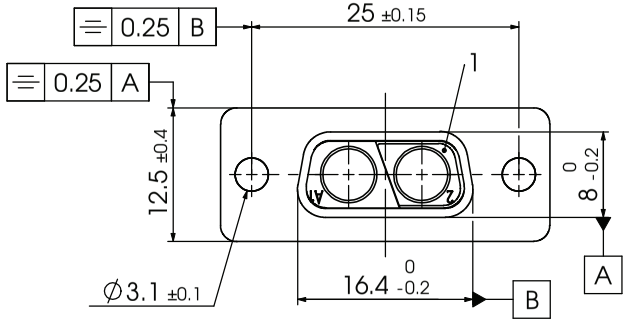

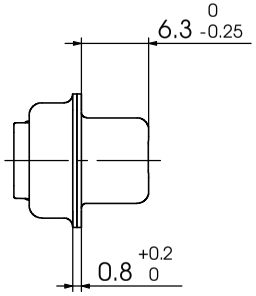

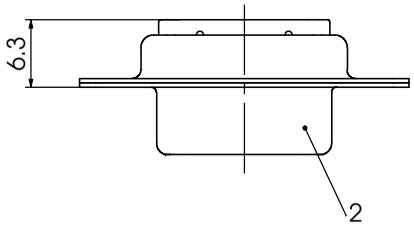

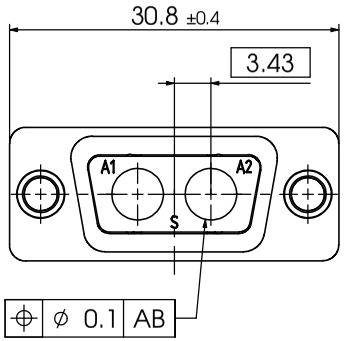

RoHS compliant

No.	St.	Part	Type Description/Material	Surface plating/Colour/Class
2	1	Shell	Steel	tin plated
1	1	Insulator	PBT (-55°C - +130°C)	black

REV.	DATE	CH.-NO.
1		

Measurement without tolerance acc. to ISO 2768-m

SCALE 2:1

	NAME / DATE
DRAWN	Denzinger 29-10-2002
CHECKED	flo8mann 29-10-2002

FCT group fctgroup.com

ORIGINAL: DIN A3-DRAWING AS A FILE

TITLE

D-Sub Mixed-Layout Connector

DWG.NO. F2W2SC-K121

REV. 1

REPLACEMENT FOR: F2W2SC-K121 a

PAGES 1

PLU020107

www.pewtronic.com

COMMENT:
ALL RIGHTS ARE RESERVED BY US FOR THIS DRAWING, WITHOUT OUR PRIOR CONSENT,
IT MAY NEITHER BE DUBLICATED NOR MADE AVAILABLE TO A THIRD PARTY,
AND IT ALSO MAY NOT BE IMPROPERLY USED BY TE RECEIVER, OR A THIRD PARTY.

www.pewtronic.com